| ES | SPAIN |
| --- | --- |

# Diagram / Parts List

## HP333D

## CORDLESS HAMMER DRIVER DRILL

2022/02

# (ES) HP333D / CORDLESS HAMMER DRIVER DRILL

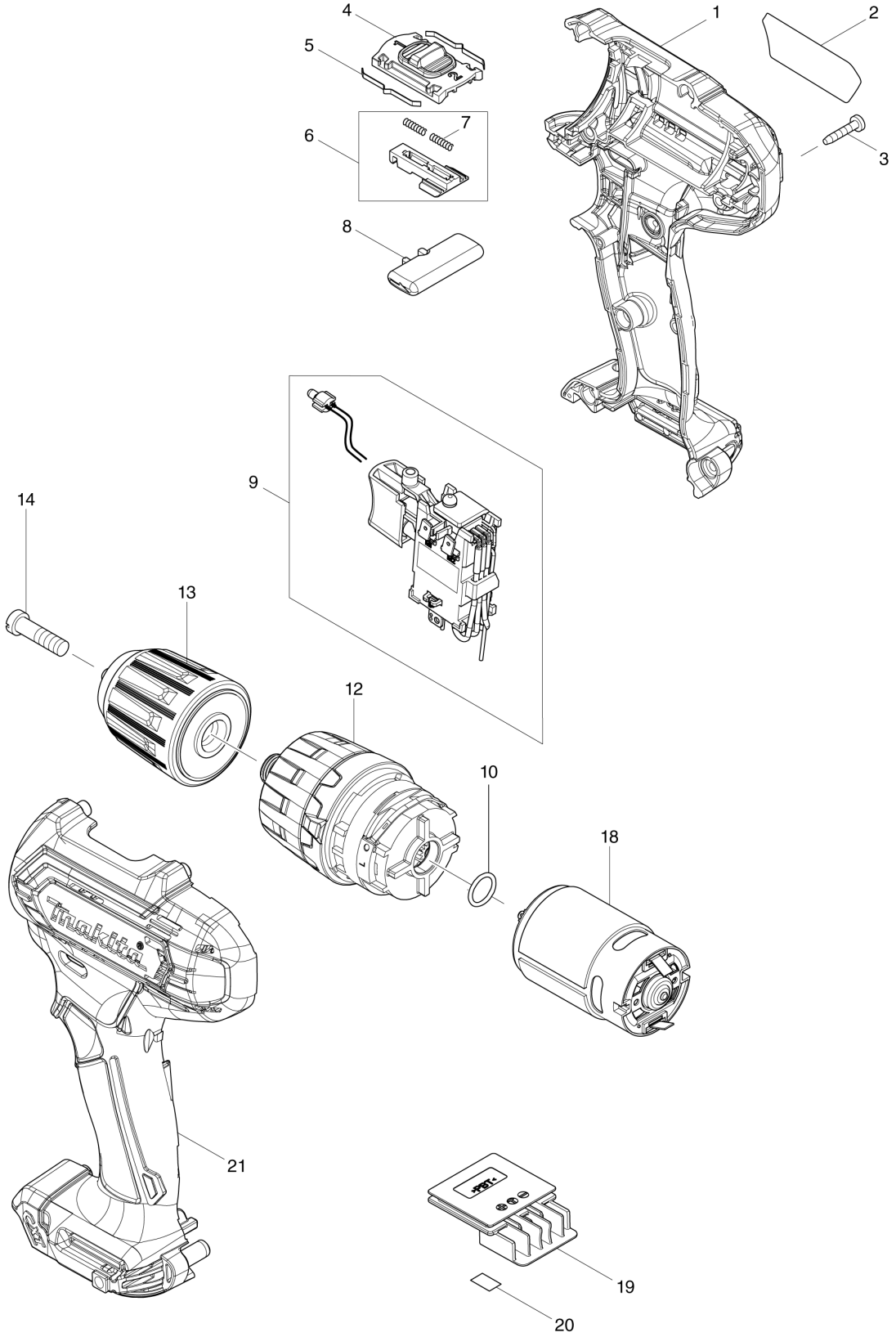

| ES | SPAIN |
|---|---|

# HP333D / CORDLESS HAMMER DRIVER DRILL

| Item | Sub | Parts No. | Parts Description | Qty | I/C | E/C No. | Close No. | Remark |
|---|---|---|---|---|---|---|---|---|
| 001 | | 183K90-5 | HOUSING SET | 1 | | | | |
| | C10 | 252126-6 | HEX. LOCK NUT M4-7 | 2 | | | | |
| | D10 | | INC. 21 | | | | | |
| 002 | | 855E12-6 | HP333D NAME PLATE | 1 | | | | |
| 003 | | 266429-2 | TAPPING SCREW 3X16 | 9 | | | | |
| 004 | | 459026-3 | SPEED CHANGE LEVER | 1 | | | | |
| 005 | | 232493-5 | LEAF SPRING | 2 | | | | |
| 006 | | 127127-2 | CHANGE LEVER ASSEMBLY | 1 | | | | |
| | D10 | | INC. 7 | | | | | |
| 007 | | 233025-1 | COMPRESSION SPRING 2 | 2 | | | | |
| 008 | | 456039-5 | F/R CHANGE LEVER | 1 | | | | |
| 009 | | 632J76-5 | SWITCH UNIT | 1 | | | | |
| | C10 | 620625-0 | LED CIRCUIT | 1 | | | | |
| | C20 | 688161-2 | LINE FILTER | 1 | | | | |
| 010 | | 213176-6 | O RING 14 | 1 | | C6230 | | |
| 012 | | 127124-8 | GEAR ASSEMBLY | 1 | | | DE105 | |
| 012-1 | | 122C95-2 | GEAR ASSEMBLY | 1 | < | DE105 | | |
| 013 | | 763238-5 | KEYLESS DRILL CHUCK 10 | 1 | | | | |
| 014 | | 251468-5 | - FLAT HEAD SCREW M6X22 | 1 | | | | |
| 018 | | 629395-8 | DC MOTOR | 1 | | | | |
| 019 | | 644813-5 | TERMINAL | 1 | | | | |
| 020 | | 855E19-2 | HP333D SERIAL NO. LABEL | 1 | | | | |
| 021 | | 183K90-5 | HOUSING SET | 1 | | | | |
| | C10 | 252126-6 | HEX. LOCK NUT M4-7 | 2 | | | | |
| | D10 | | INC. 1 | | | | | |
| A01 | | 251314-2 | + SCREW M4X12 | 1 | | | | |
| A02 | | 346909-5 | HOOK | 1 | | | | |
| A03 | | 784244-7 | + BIT 2-50 | 1 | | | | |
| A04B | | 821661-1 | PLASTIC CARRYING CASE | 1 | | | | |
| | C10 | 417724-5 | LATCH | 2 | | | | |
| A04C | | 821661-1 | PLASTIC CARRYING CASE | 1 | | | | |
| | C10 | 417724-5 | LATCH | 2 | | | | |
| A05B | | 818P52-1 | HP333DSAE MODEL NO. LABEL | 1 | | | | |
| A05C | | 818P58-9 | HP333DWME MODEL NO. LABEL | 1 | | | | |
| A08B | | 456128-6 | BATTERY COVER | 1 | | | | |
| A08C | | 456128-6 | BATTERY COVER | 1 | | | | |
| A09B | | ***DC10SB | DC10SB BATTERY CHARGER | 1 | | | | |
| | D10 | | COMPO-PARTS | | | | | |
| A09C | | ***DC10WD | DC10WD BATTERY CHARGER | 1 | | | | |
| | D10 | | COMPO-PARTS | | | | | |
| A10B | | 197396-9 | BATTERY BL1021B SET | 2 | | | C5226 | |
| A10C | | 197406-2 | BATTERY BL1041B SET | 2 | | | C5227 | |
| A10-1B | | 197396-9 | BATTERY BL1021B SET | 2 | O | C5226 | | |
| A10-1C | | 197406-2 | BATTERY BL1041B SET | 2 | O | C5227 | | |
| E01 | | 632N11-7 | LINE FILTER UNIT | 1 | | | | |

B:HP333DSAE(H)
C:HP333DWME(H)

Interchange
O : Yes
X : No
< : the new part can be substituted for the current.
> : the current part can be substituted for the new.
S : Interchangeable as a set.